Leiko H1

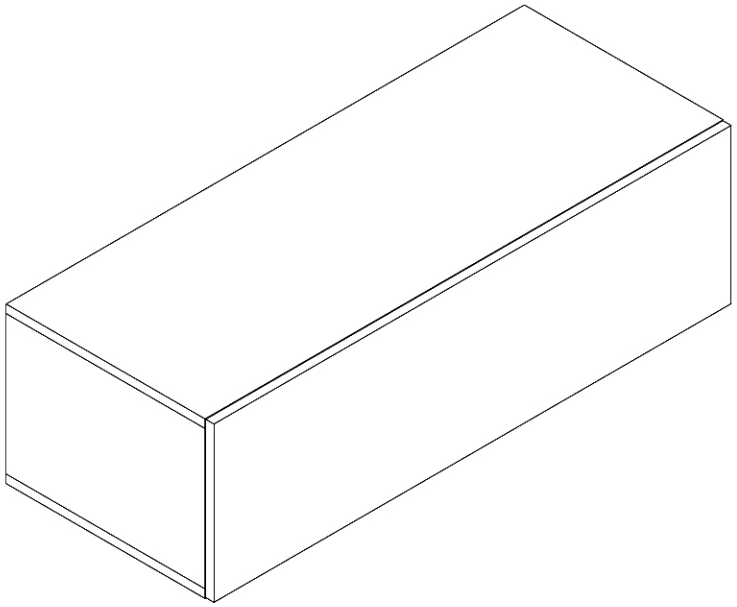

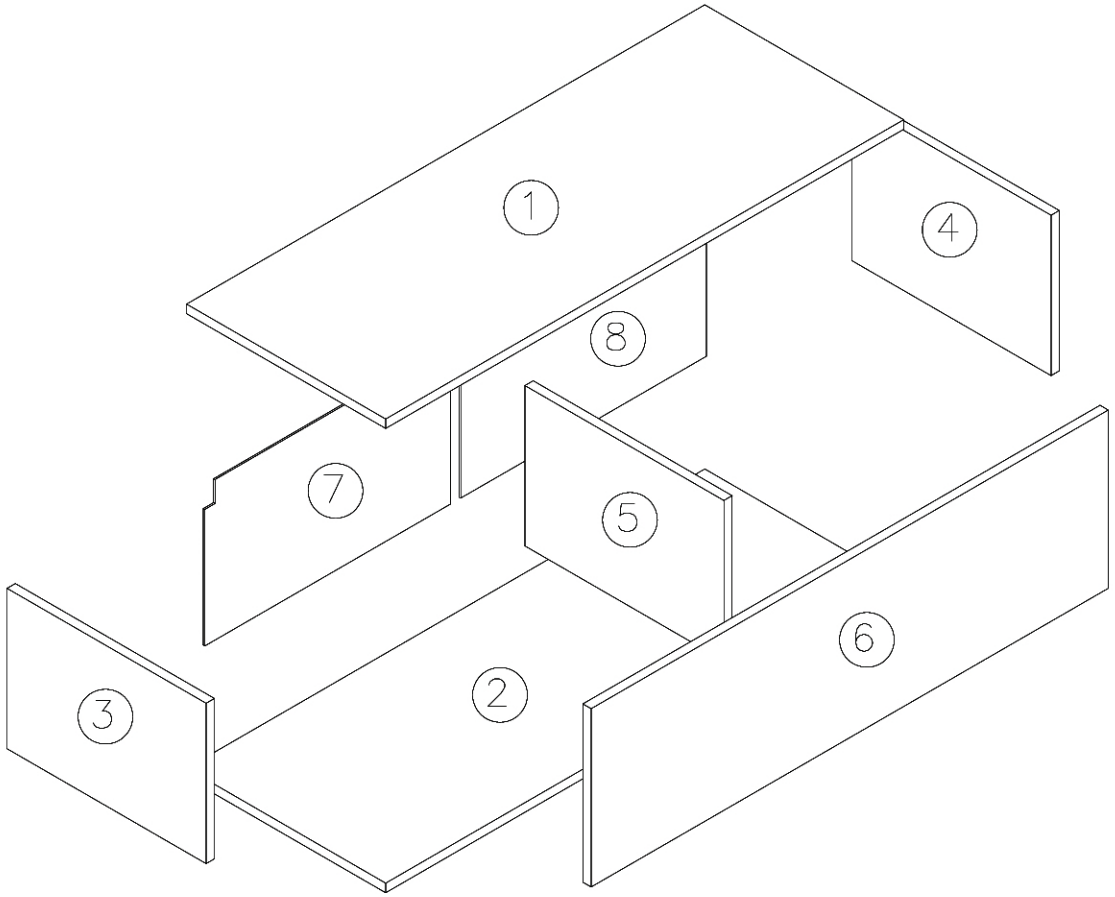

A 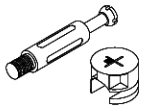 12PCS	B 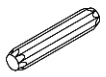 12PCS	C 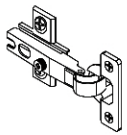 2PCS	D 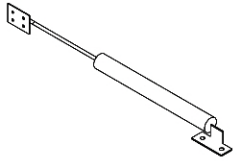 1PCS	E 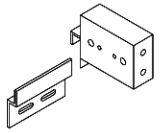 2PCS	F 3.5*14 18PCS	G 3.5*30 4PCS	H 4*50 4PCS
I 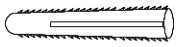 4PCS	J 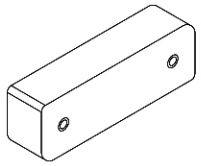 4PCS	K 3.5*25 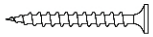 8PCS					

1

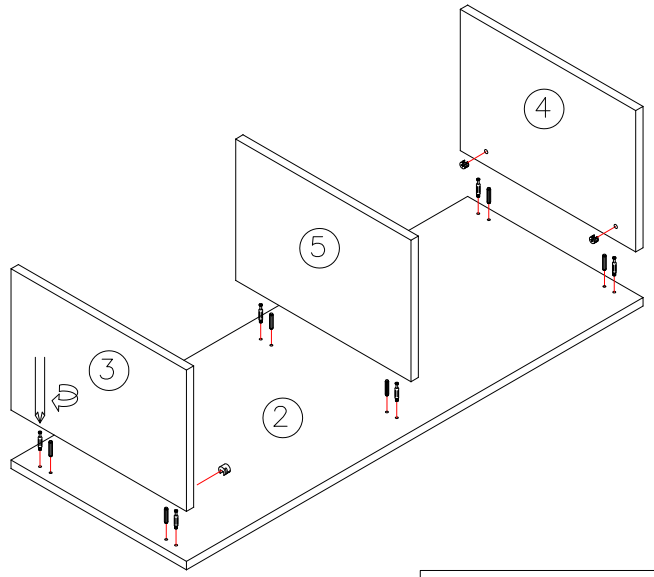

A*6 B*6

2

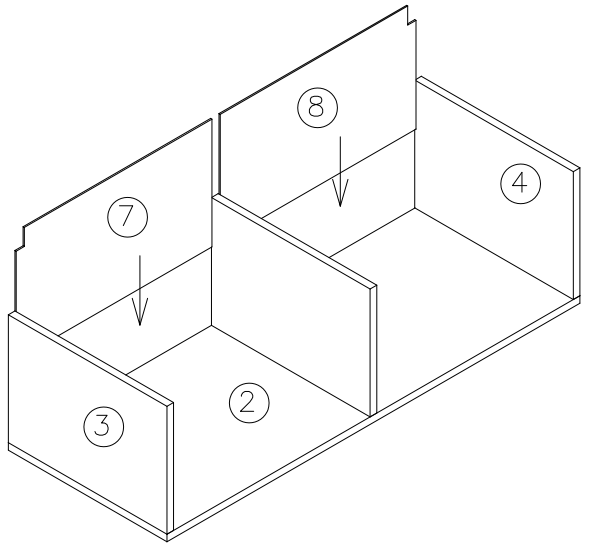

3

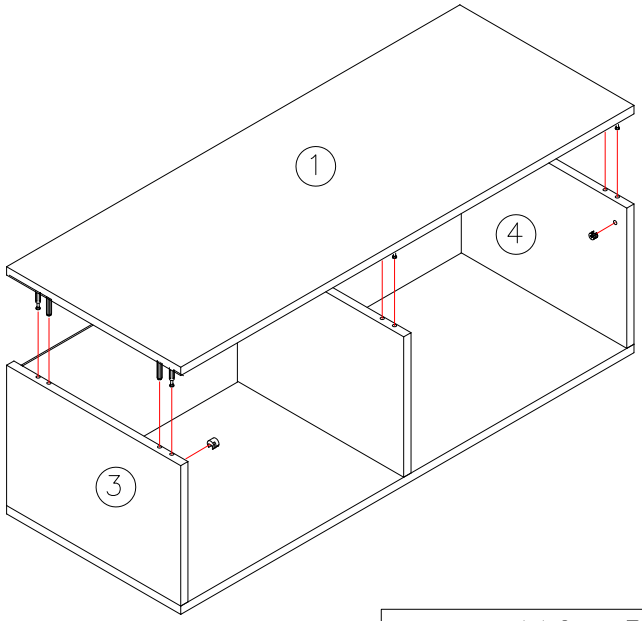

A*6 B*6

4

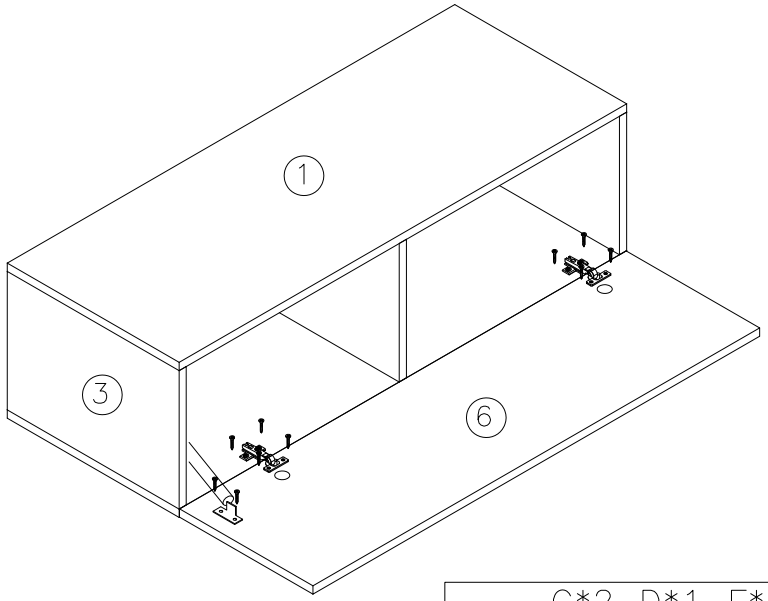

C*2 D*1 F*12

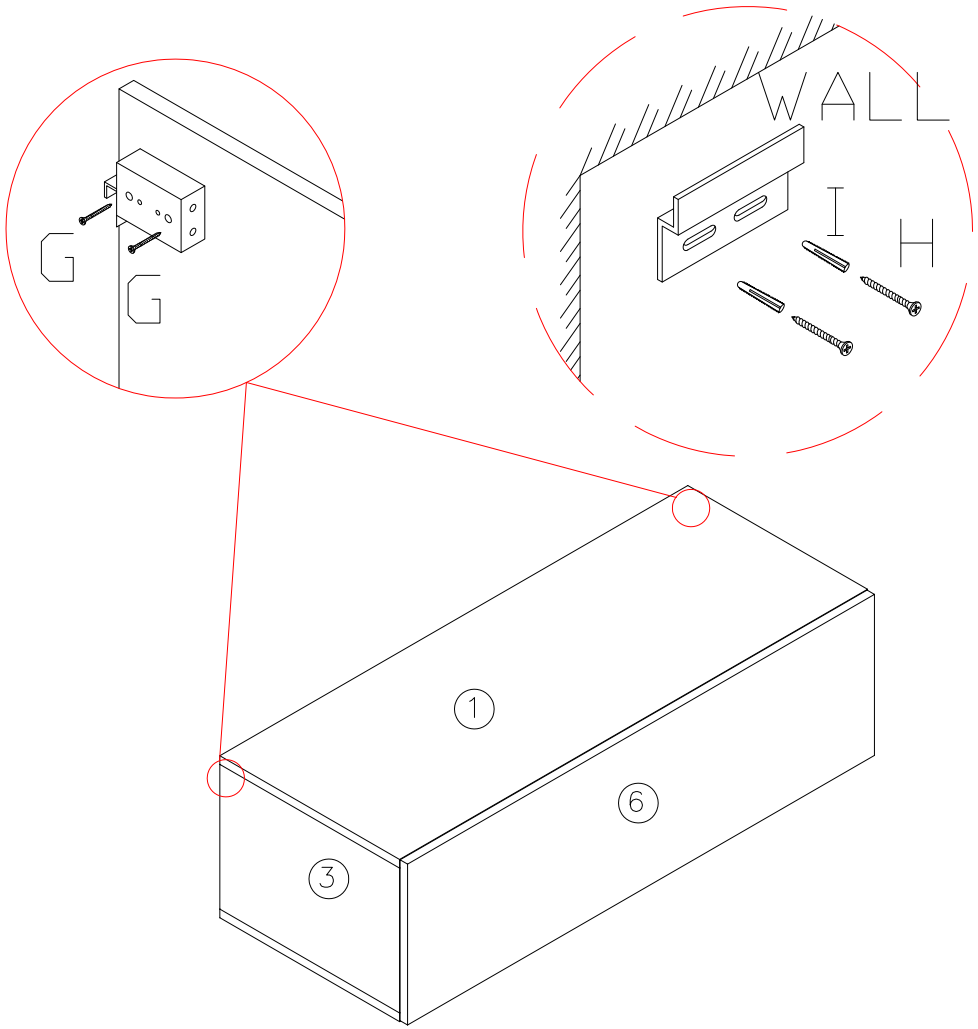
WALL
G
G
I
H
1
6
3

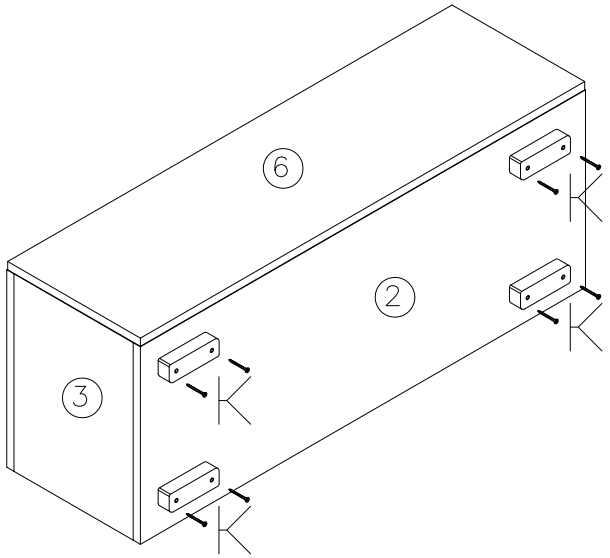
6
2
3