ALICANTE

1/6

CMAM101

SB3

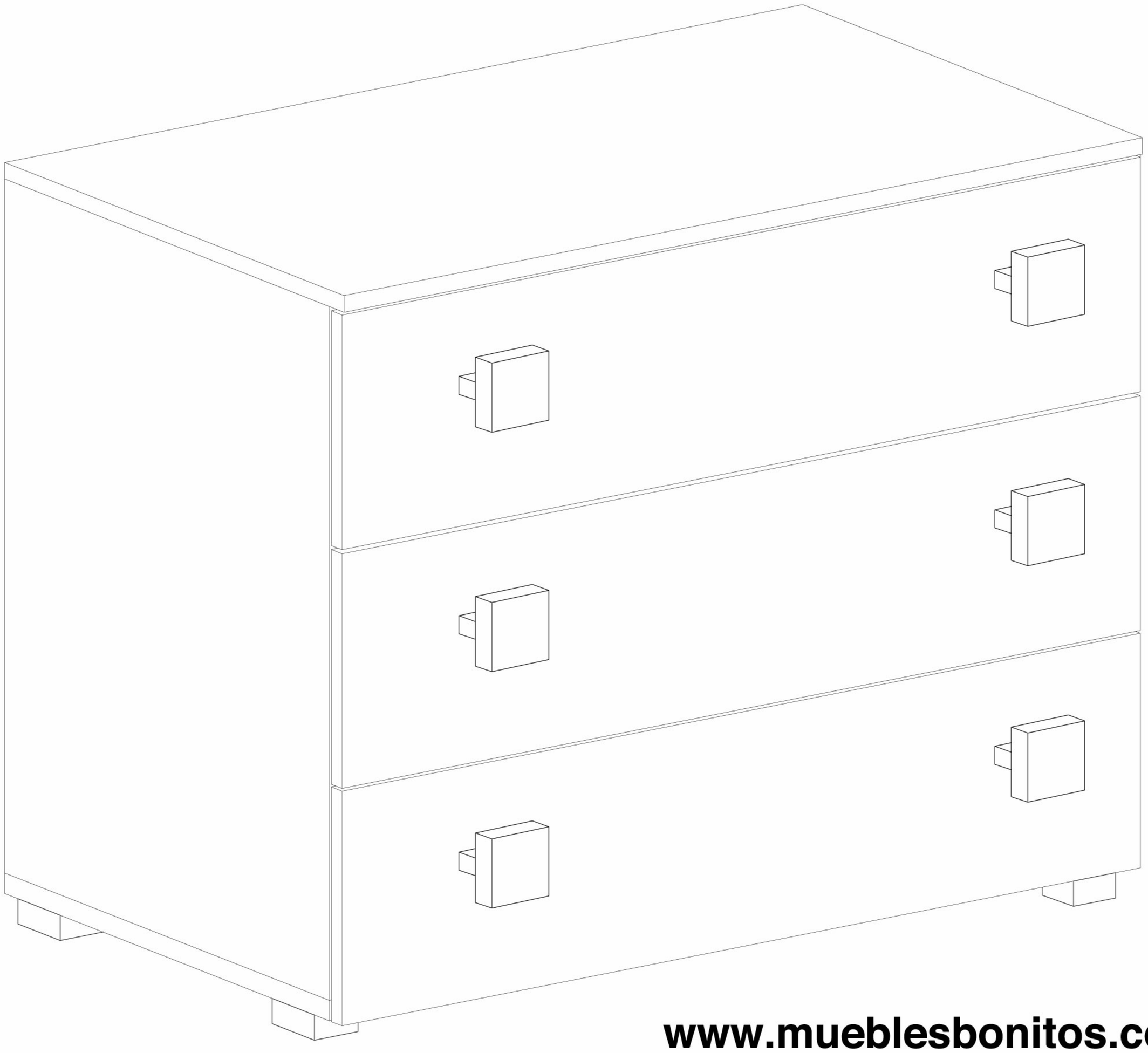

www.mueblesbonitos.com

www.designameublement.com

www.lettiemobili.com

INSTRUCCIONES
ISTRUZIONI
MODE D'EMPLOI
INSTRUCTIONS

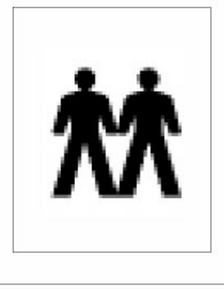

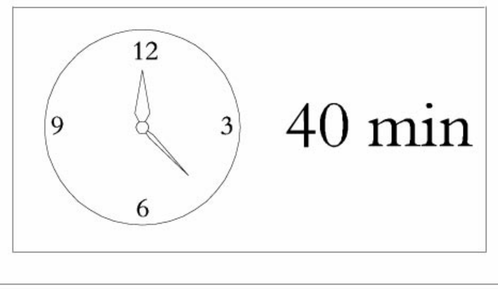

CMAM101
SB2

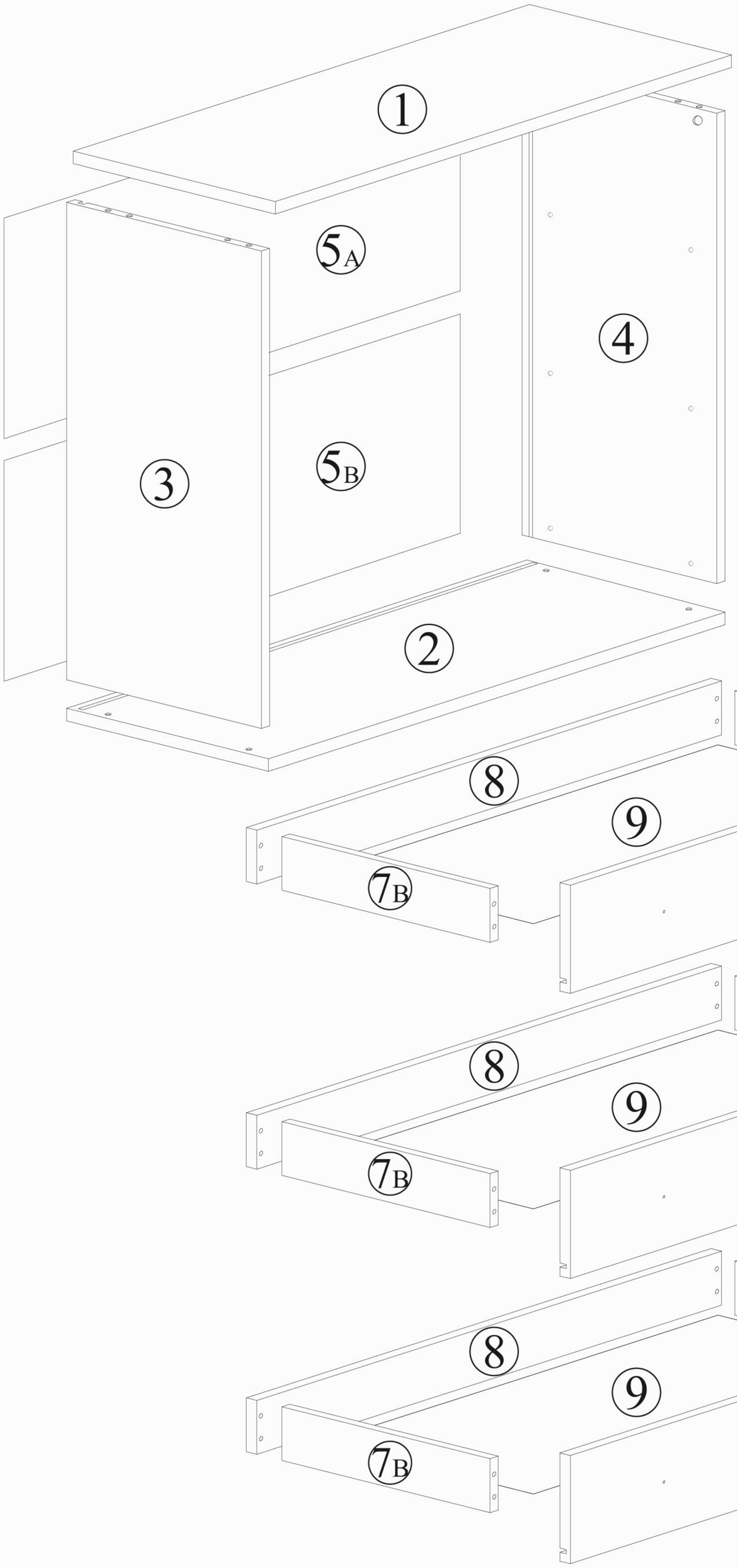

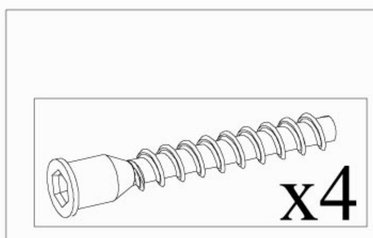
x4

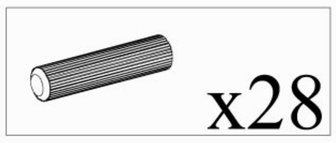
x28

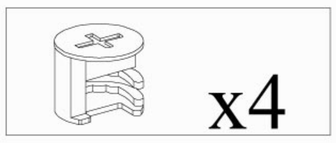
x4

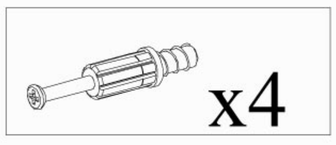
x4

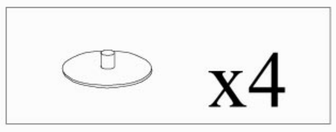
x4

x12

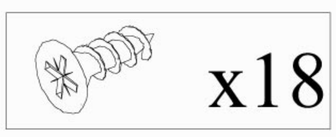
x18

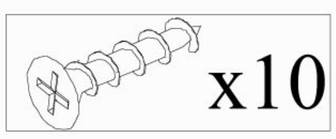
x10

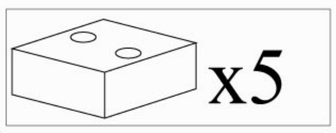
x5

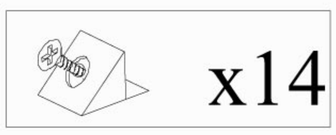
x14

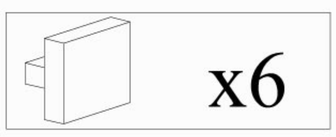
x6

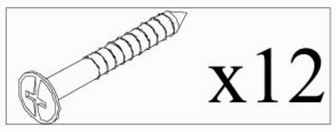
x12

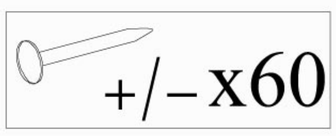
+/– x60

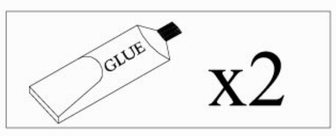

x2

x1

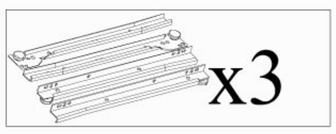
x3

1

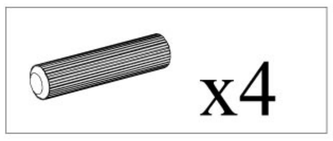
x4

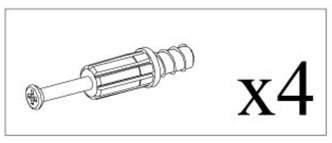
x4

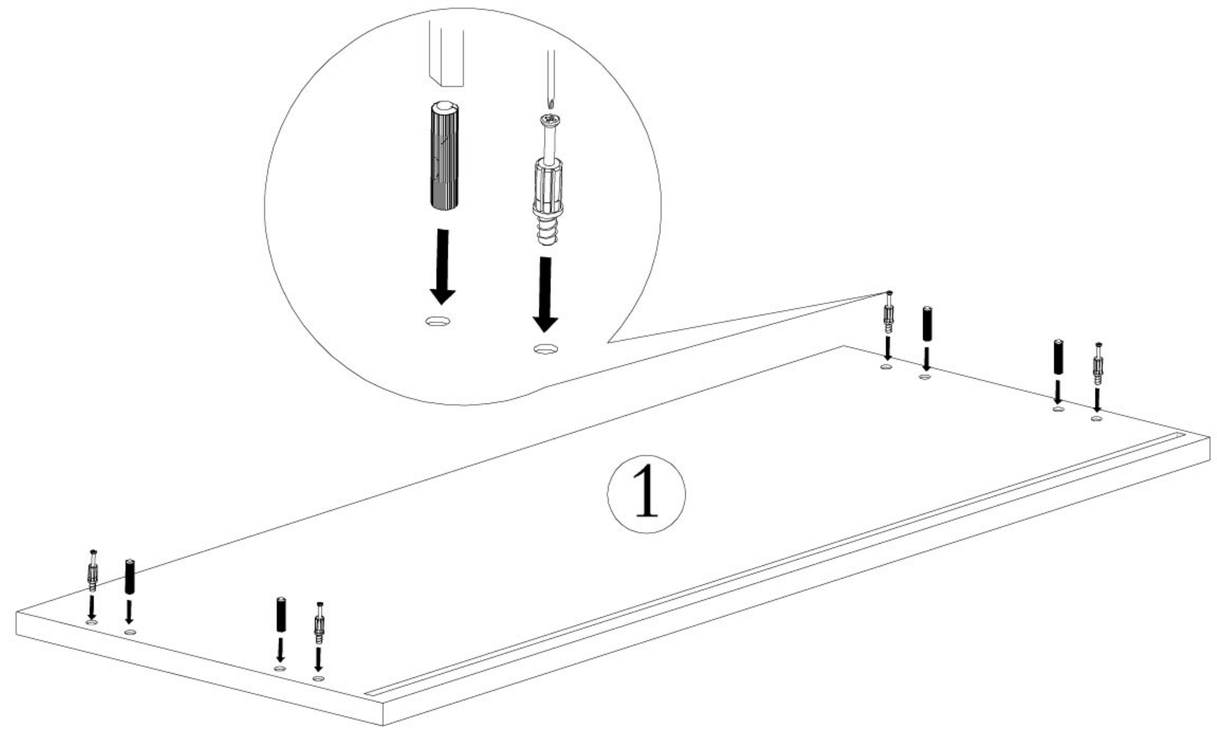

2

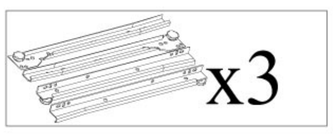
x3

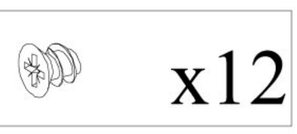
x12

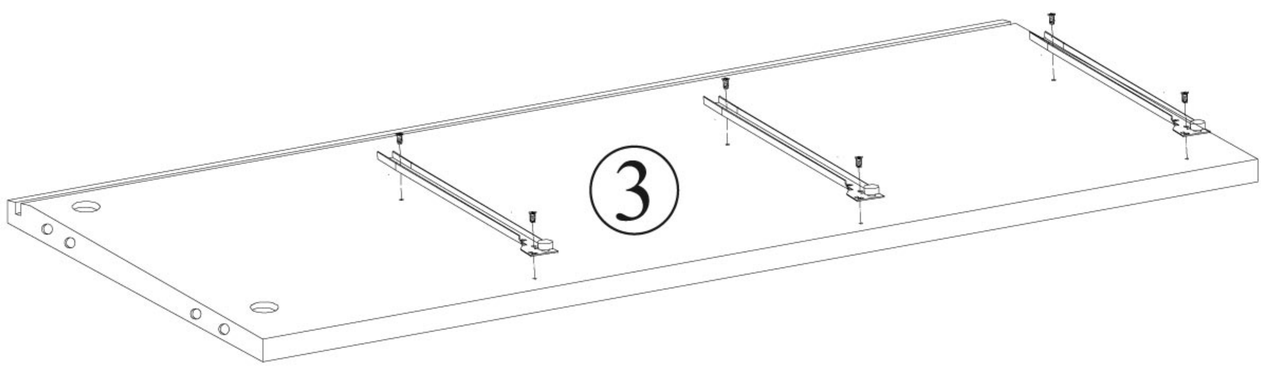

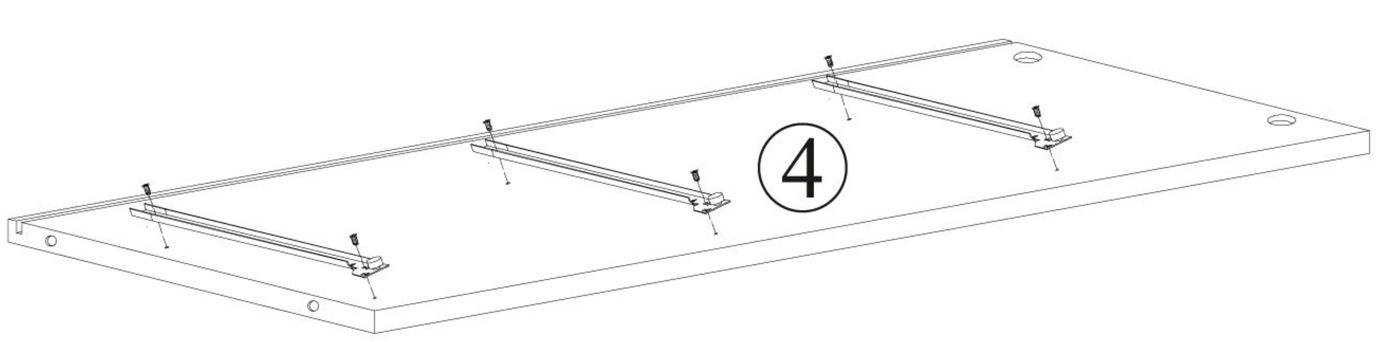

3

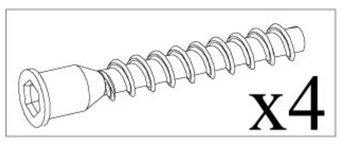
x4

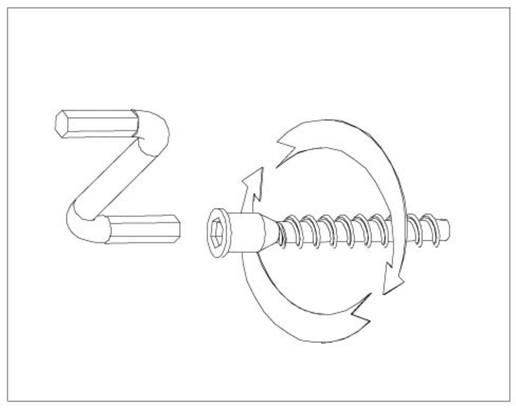

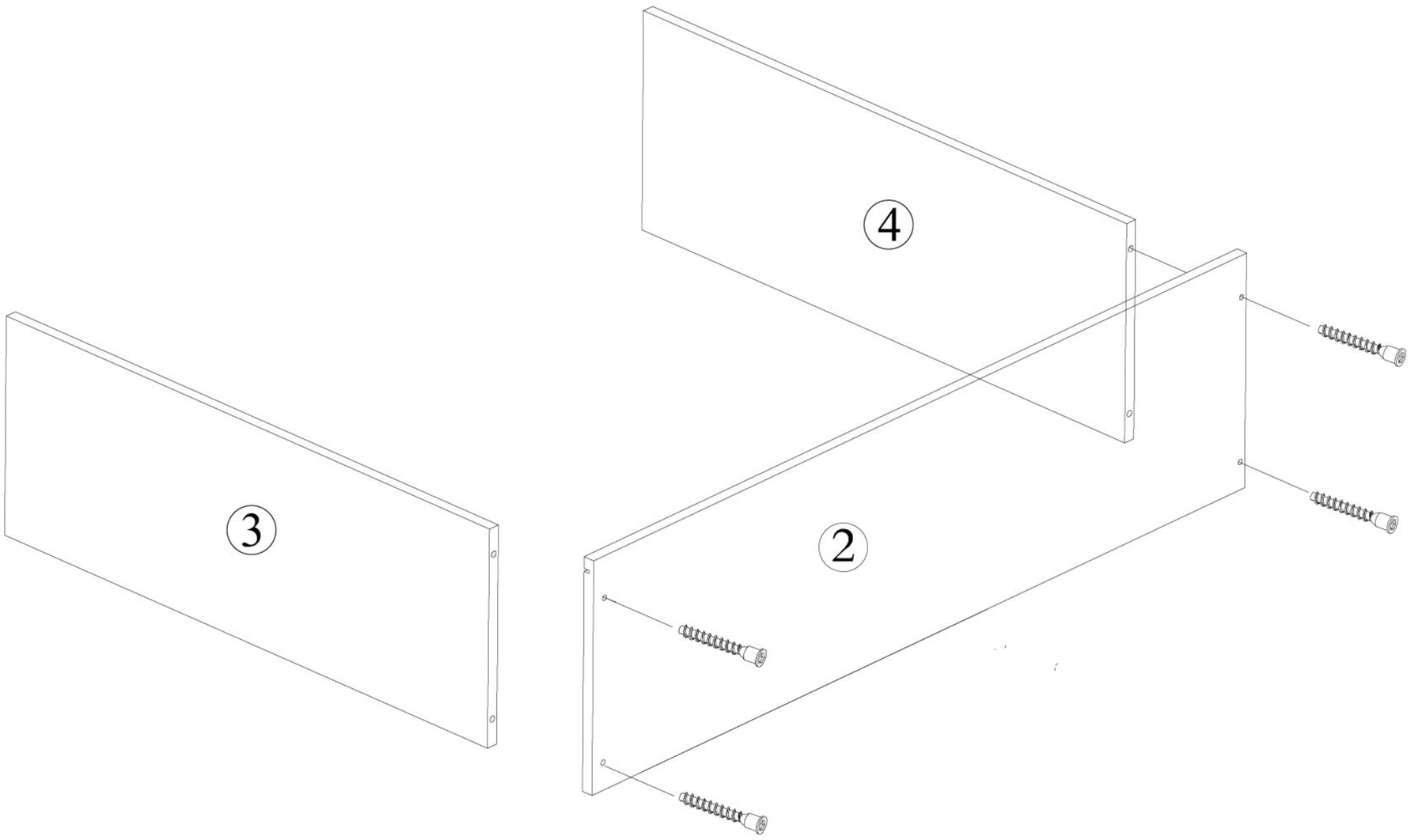

CMAM101
SB2

4

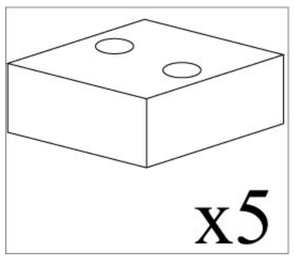

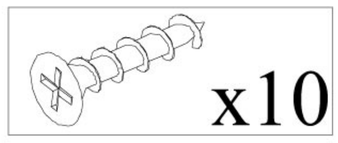

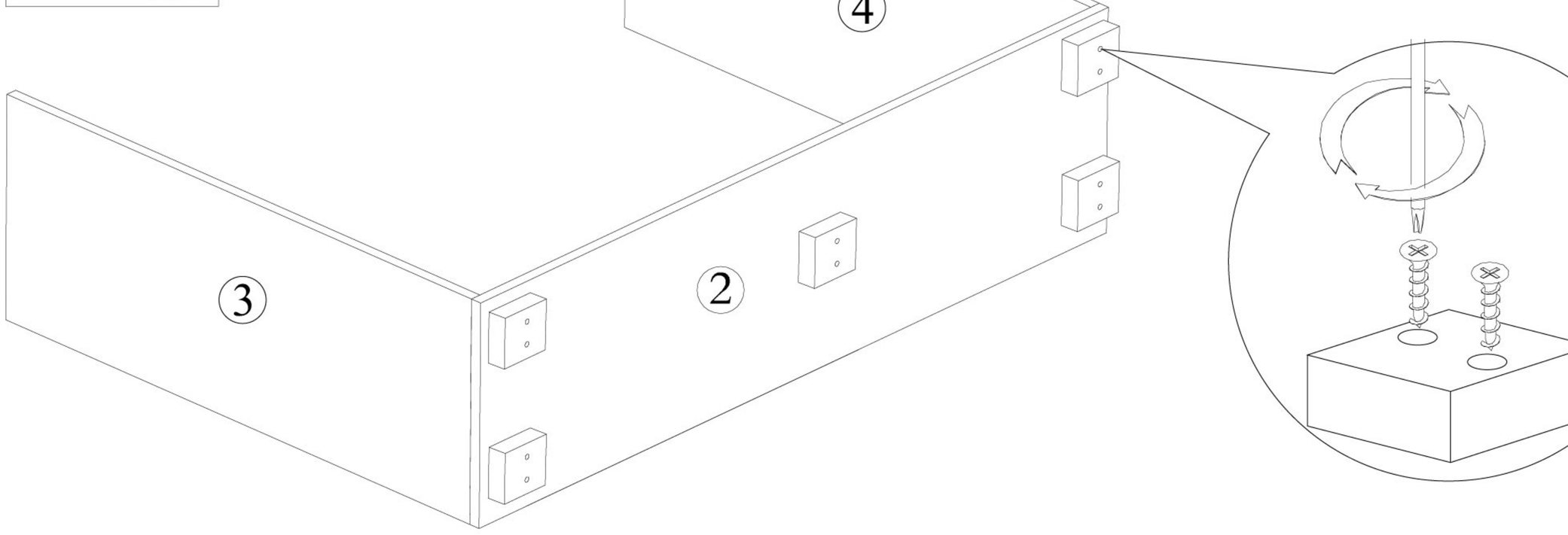

5

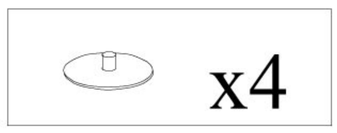

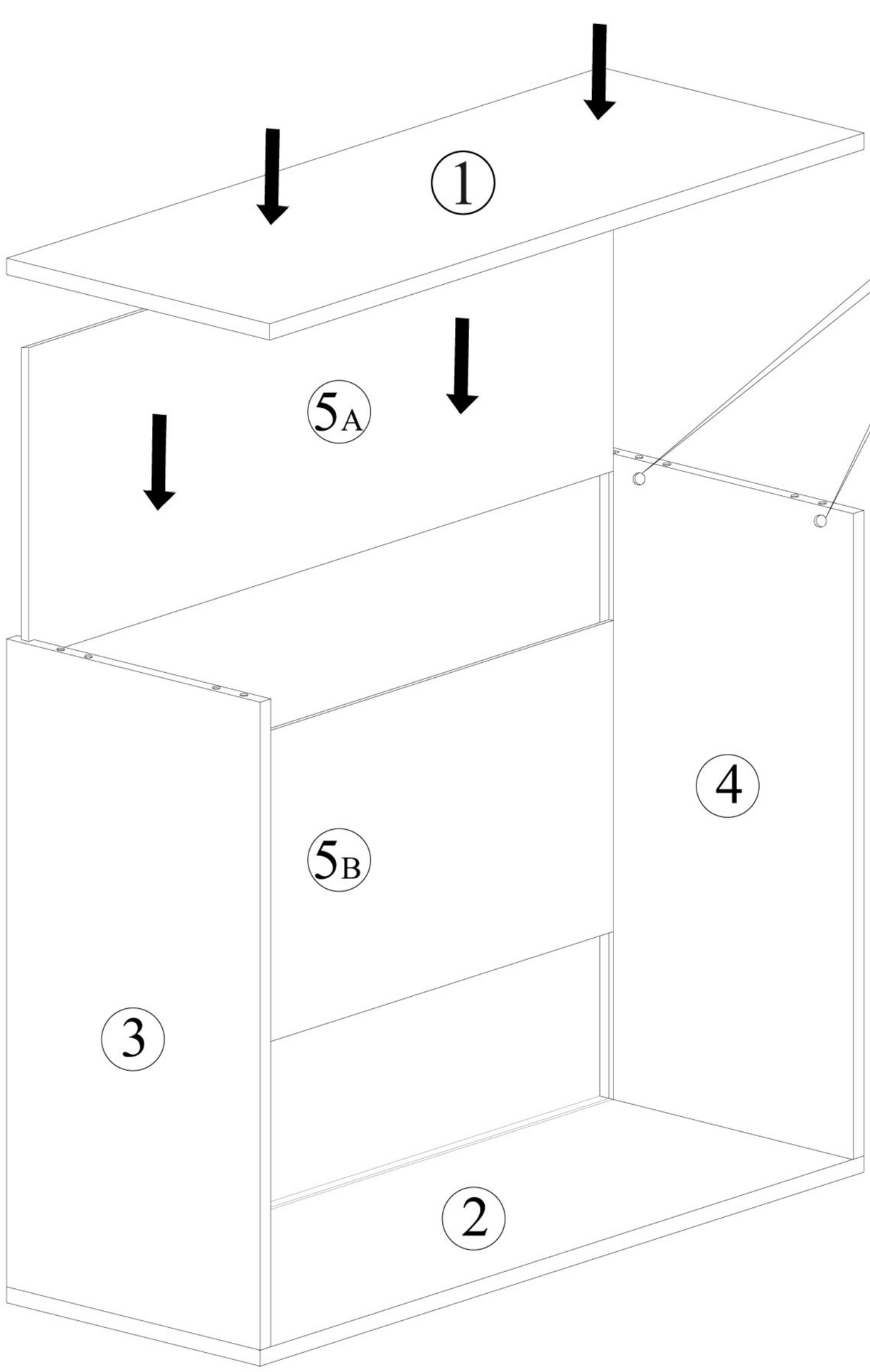

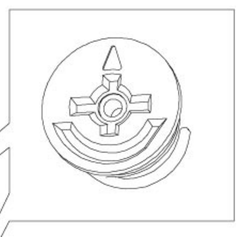

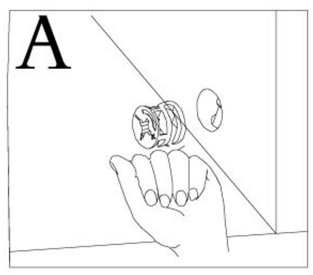

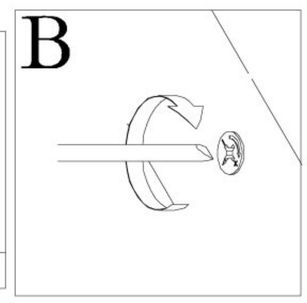

6

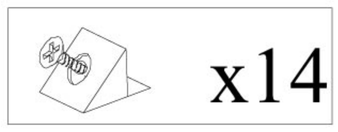

x14

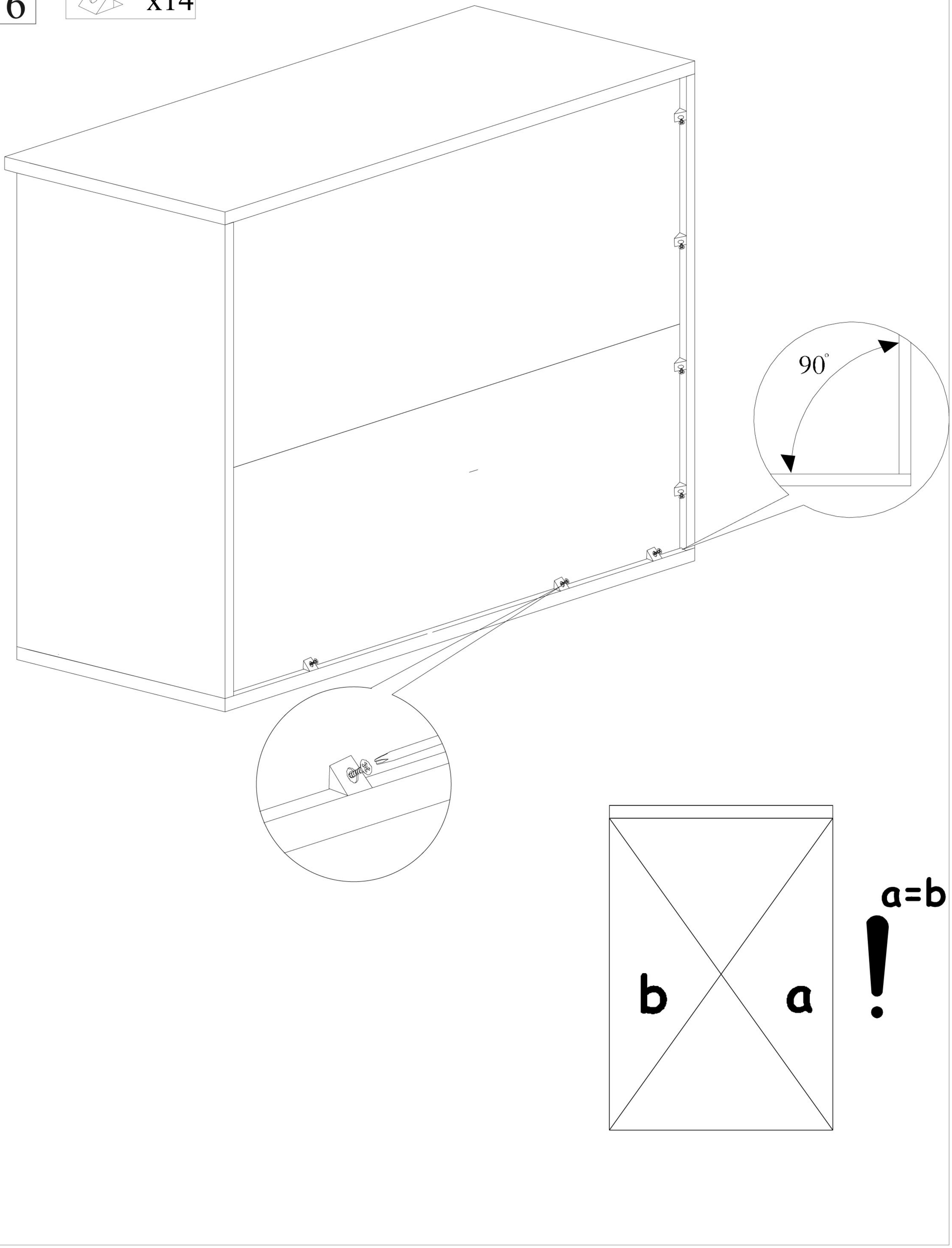

a=b

!

7

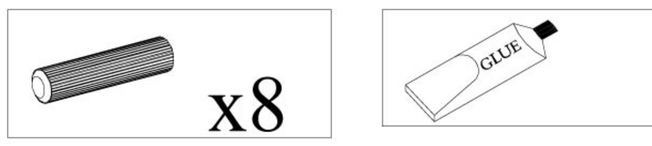

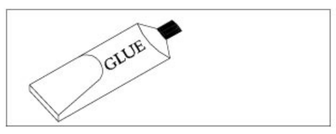

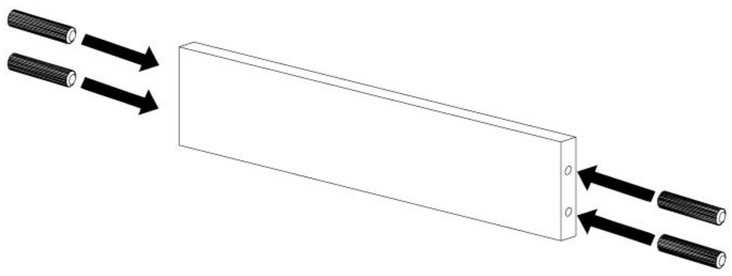

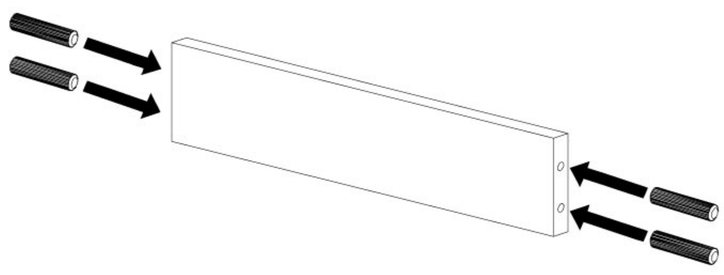

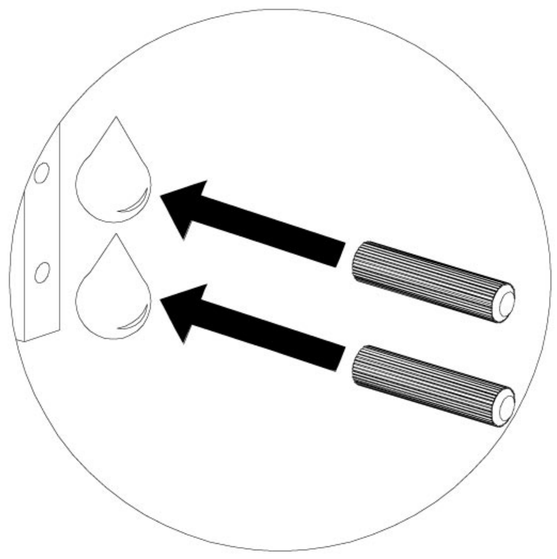

8

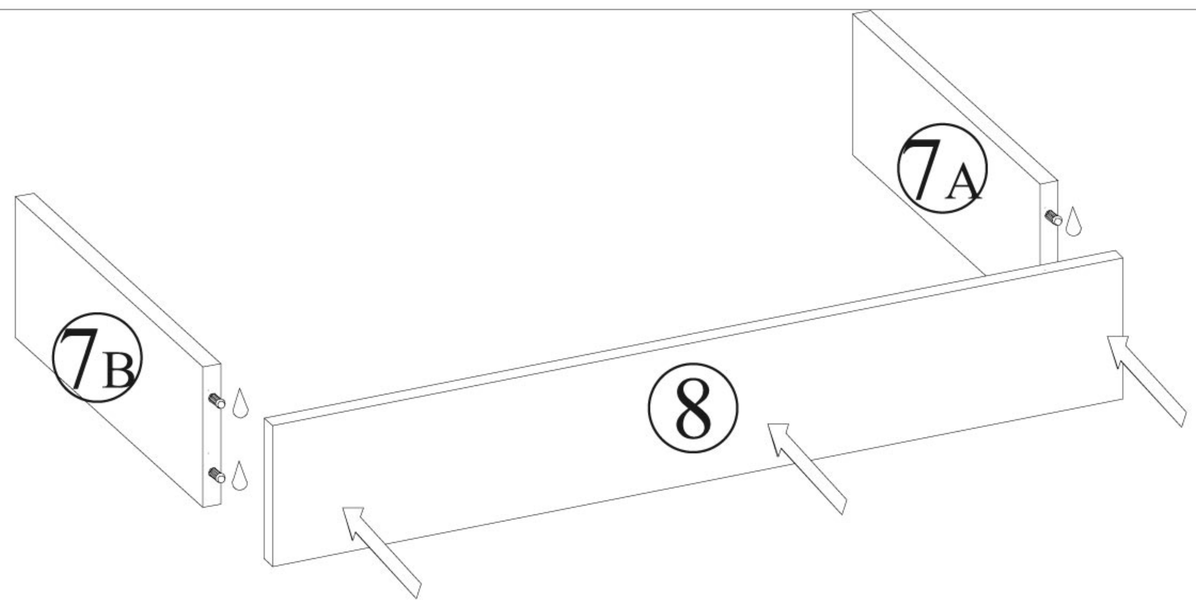

9

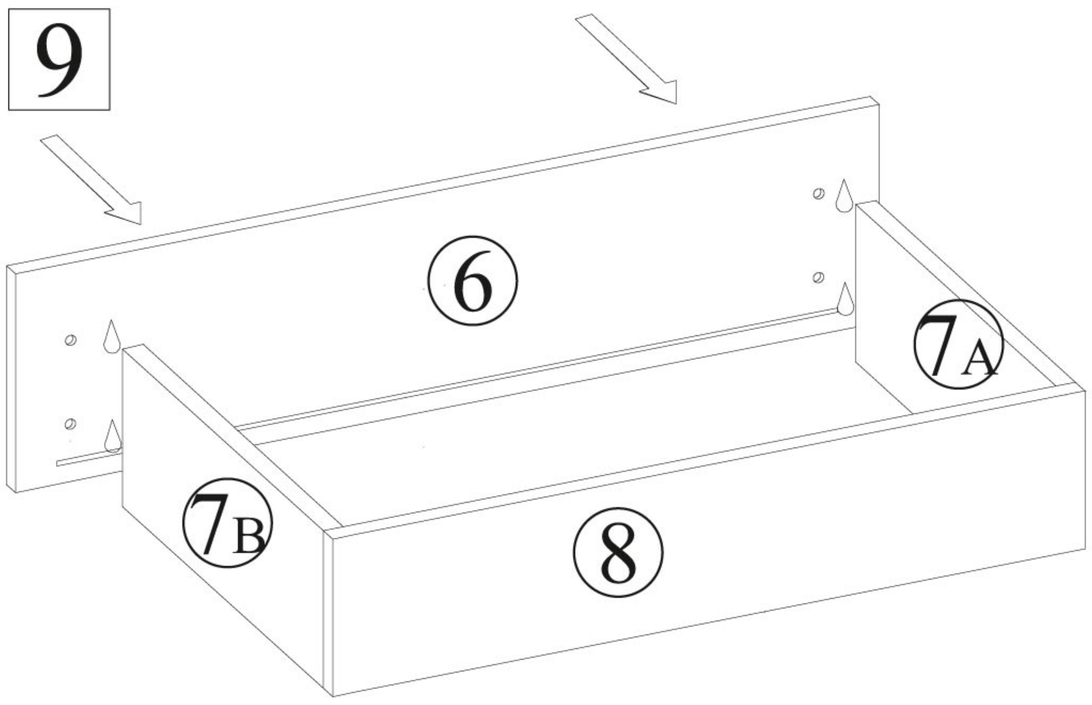

10

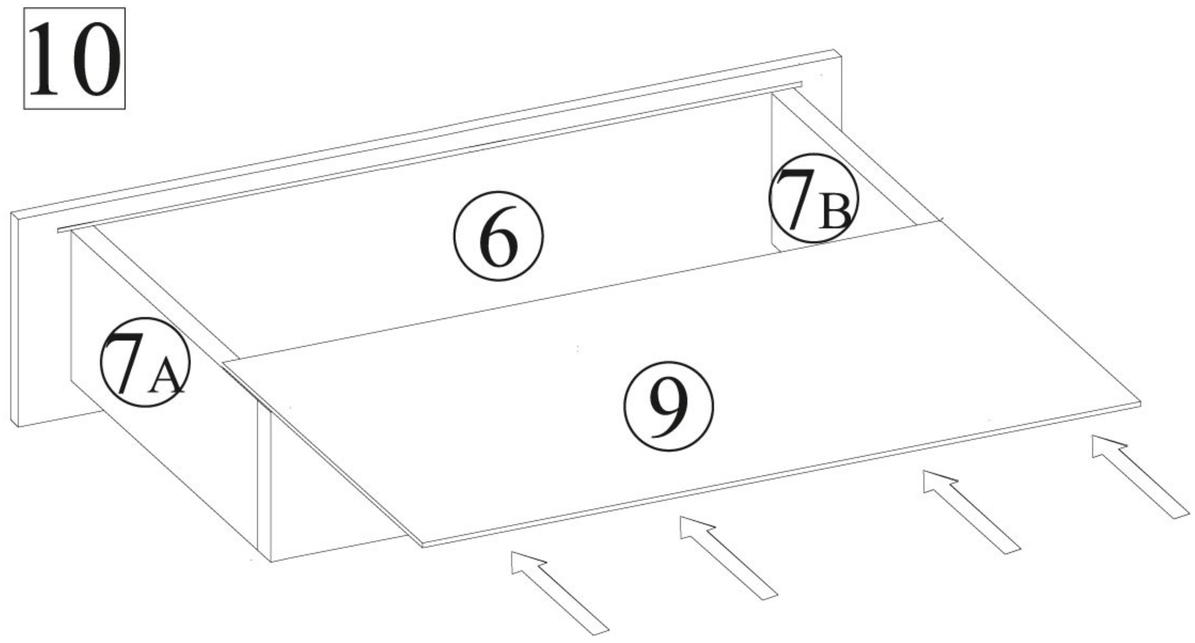

11

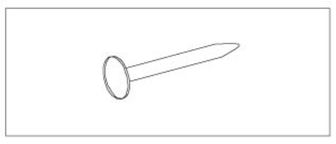

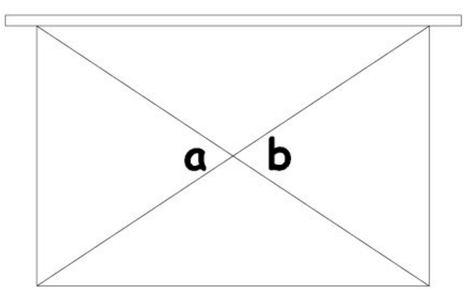

a=b

!

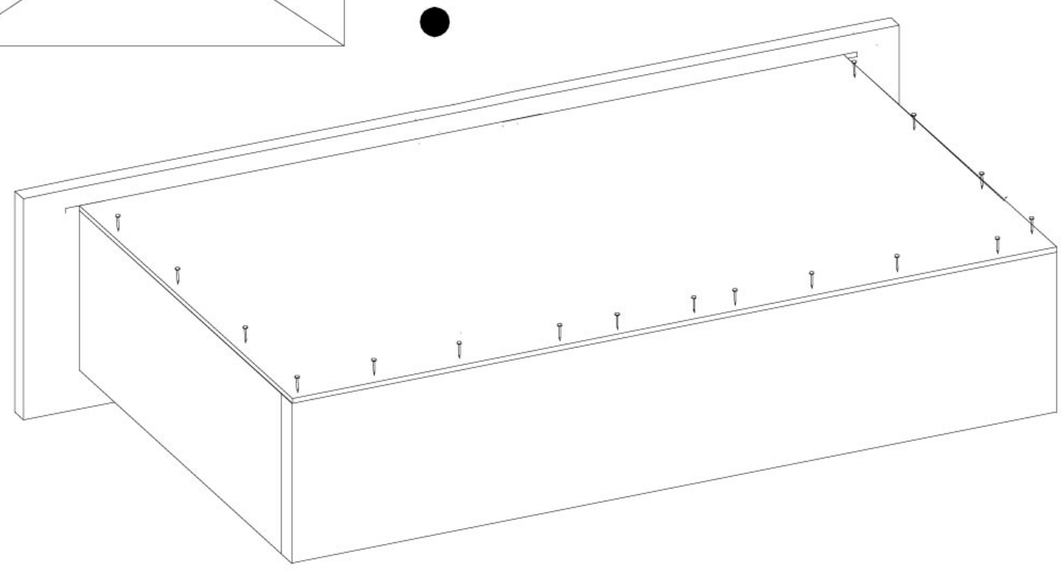
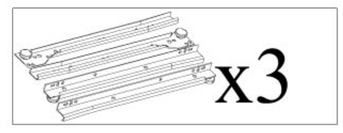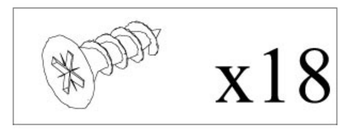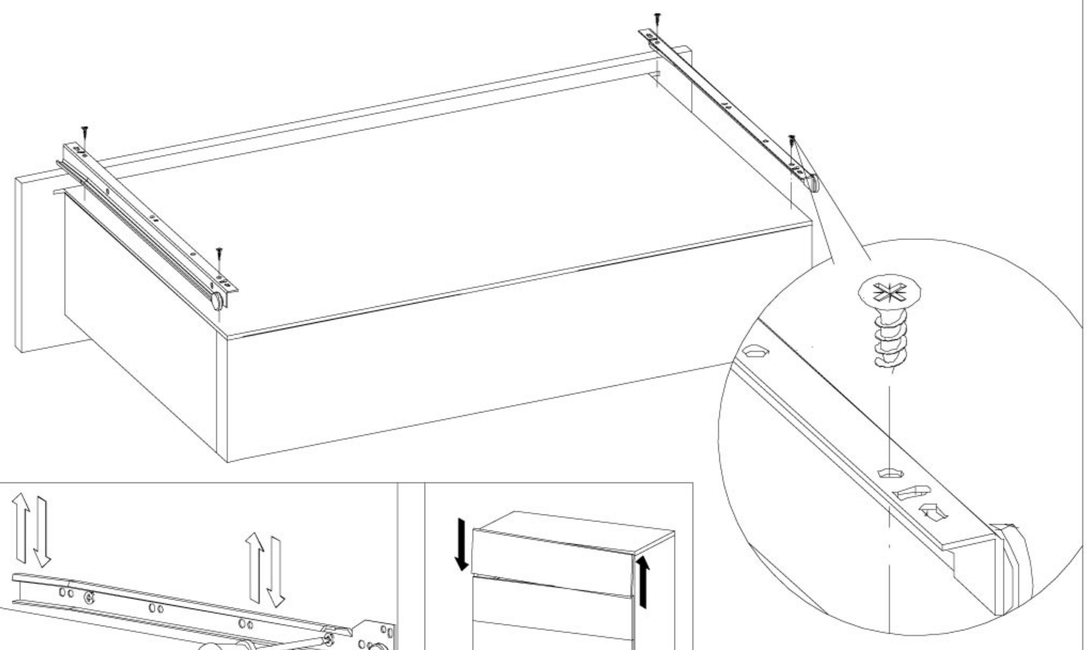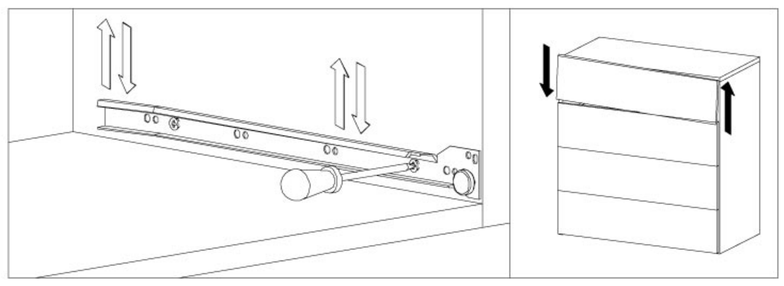
12